REVISION HISTORY				
REV	ECN	DESCRIPTION	DATE	APPROVED
A	K990047	RELEASED	7/15/1999	dmjohnson
A	K090063	WAS SIZE "D" K100-00611-16, REDRAWN IN INVENTOR	3/4/2009	pggalea

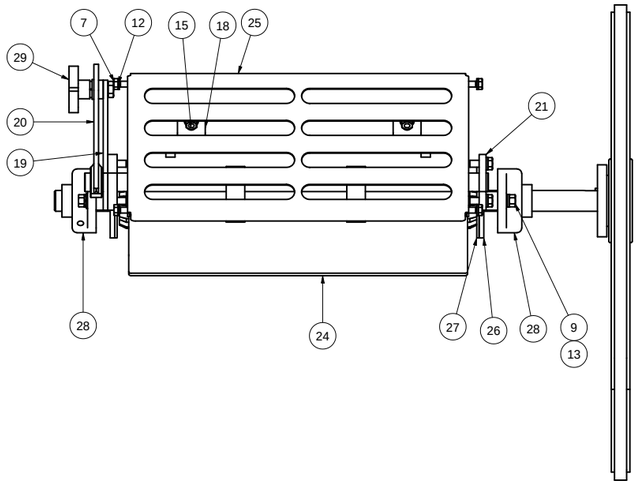

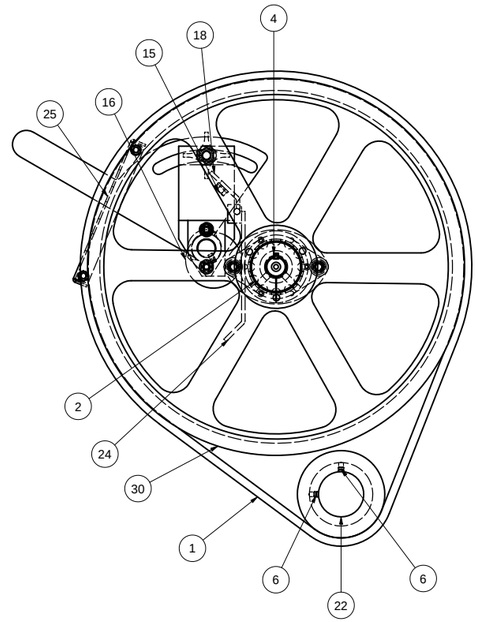

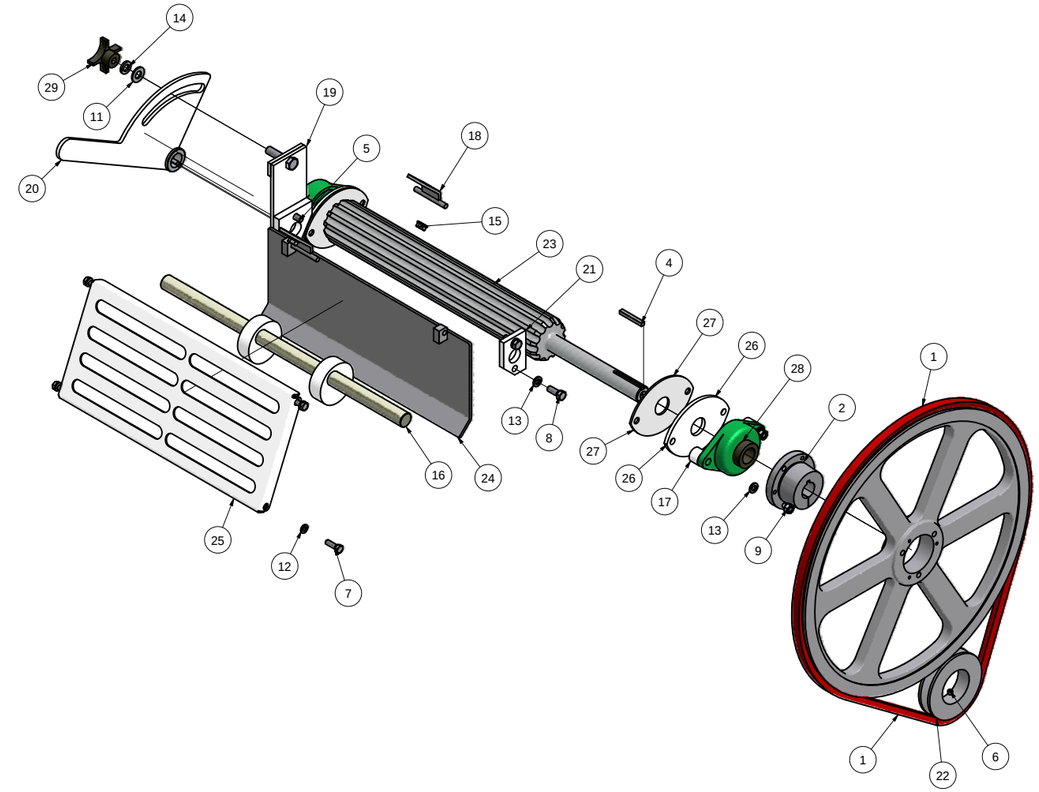

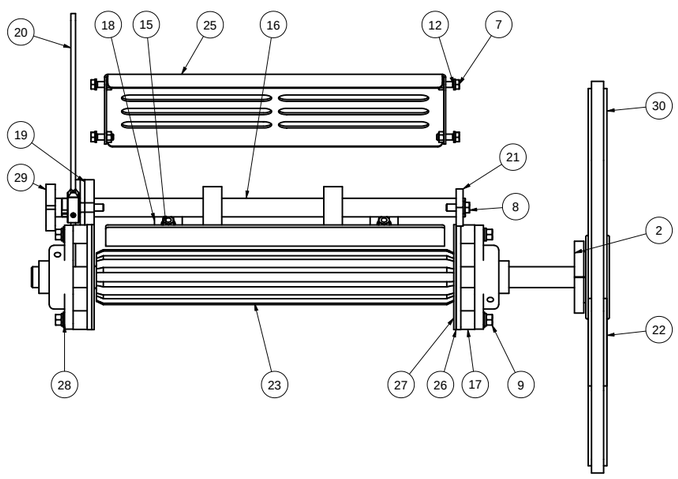

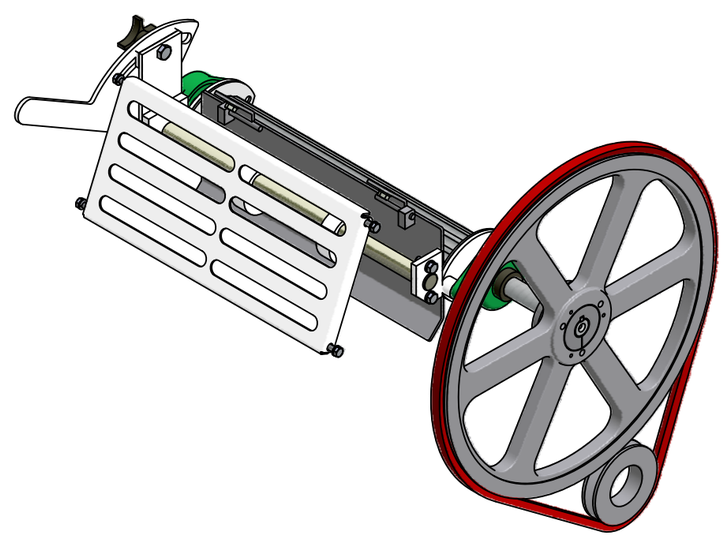

ITEM	PART NUMBER	QTY	DESCRIPTION
30	K915-14101	1	SHEAVE, 1B20.0 SK
29	K910-01261	1	KNOB, CAST 1/2-13 OPEN
28	K902-04401	2	BRNG, F2B-SXV-102 1.125" W/COLLAR
27	K201-05365	2	SPACER, FEED ROLL, TEFLON
26	K201-05364	2	SPACER, BRNG OUTER, FEED ROLL 10-12"
25	K200-05605	1	GUARD, NIP, ROLL FEED 10 X 18"
24	K200-01952	1	GATE WLDMT, FEED ROLL 10 X 18"
23	K200-01722	1	ROLL, FEED 10 X 18"
22	K200-01664	1	SHEAVE, DRIVE, FEED ROLL 2.44"
21	K200-00894	1	PLT, CVR FEED GATE ECC 10-12"
20	K200-00831	1	HANDLE WLDMT, ECC FEED GATE 10-12"
19	K200-00830	1	BRKT WLDMT, LEVER FEED GATE 10-12"
18	K200-00820	2	HINGE, FEEDER GATE 10-12"
17	K200-00787	4	BUSHING, FEED ROLL CDS 10"
16	K100-00621	1	SHAFT WLDMT, ECC FEED GATE 10X18"
15	66784400	2	NUT, HEX SERR LOCK 3/8-16
14	66445200	1	WASHER, LOCK HELICAL 1/2"
13	66444400	6	WASHER, LOCK HELICAL 3/8"
12	66443800	4	WASHER, LOCK HELICAL 5/16"
11	66405200	1	WASHER, FLAT 1/2" TYPE A
10	66404400	3	WASHER, FLAT 3/8" NARROW TYPE A
9	66084400	4	NUT, HEX 3/8-16
8	62584422	2	HHCS, 3/8-16 X 1.00"
7	62583822	4	HHCS, 5/16-18 X 1.00"
6	61663805	2	SCW, SET 5/16-18 X .25" HEX SCKT FLAT PT
5	61304426	2	SCW, CAP FLT SCKT HD 3/8-16X1.25"
4	49000632	1	KEY, SQUARE .250 X 2.00"
3	49000608	1	KEY, 1/4" SQ X 1/2"
2	44010912	1	BUSHING, QD SK 1.125
1	40000520	6'	V-BELT SZ B LINK TYPE PWR CR

Parts List

NOTES:
1. DO NOT SCALE FROM DRAWING.
2. ONE PIECE REQUIRED PER K000-01231: ROLLER MILL, SINGLE HI. ROLL FEED, 10 X 18".
3. RIGHT HAND MILL SHOWN, ASSEMBLE OPPOSITE FOR LEFT HAND, SEE SALES ORDER.
4. INSTALL CONTROL LEVER ASSY AND FEED GATE, BEFORE WELDING THE ECC SHAFT WELDING IN PLACE.
5. INSTALL DRIVE GUARD BACKPLATE BEFORE INSTALLING DRIVE AND DRIVEN FEED ROLL SHEAVES.

This drawing is the property of the A.T. Ferrell Company, Inc and must be returned immediately upon request. No part of this drawing may be reproduced, stored in a retrieval system or transmitted in any form or by any means, without prior written consent of the A.T. Ferrell Company, Inc

CAD
NO MANUAL CHANGES

TOLERANCES EXCEPT AS NOTED
DECIMAL: xxx ± .005 xx ± .030
FRACTIONAL: ± 1/32
ANGULAR: ± 1/2°

Ferrell-Ross MATERIALS PROCESSING & RECOVERY SINCE 1869
DIVISION OF A. T. FERRELL COMPANY — BLUFFTON, INDIANA - USA

FINISH:	SCALE: 1:4	DRAWN BY: pggalea	APPROVED BY:
TITLE: FEED ROLL ASSY, SHEAVE DRIVE 10 X 18" MILL			
DATE: 3/3/2009	SIZE: D	PART NUMBER: K100-00612	SHEET: 1 of 1

K100-00612