REVISION HISTORY					
ZONE	REV	LTR	DESCRIPTION	DATE	APPROVED
1	A	K050050	RELEASE PRINT, ADD K100-00662 COMPONENTS	11/30/2005	DMJOHNSON

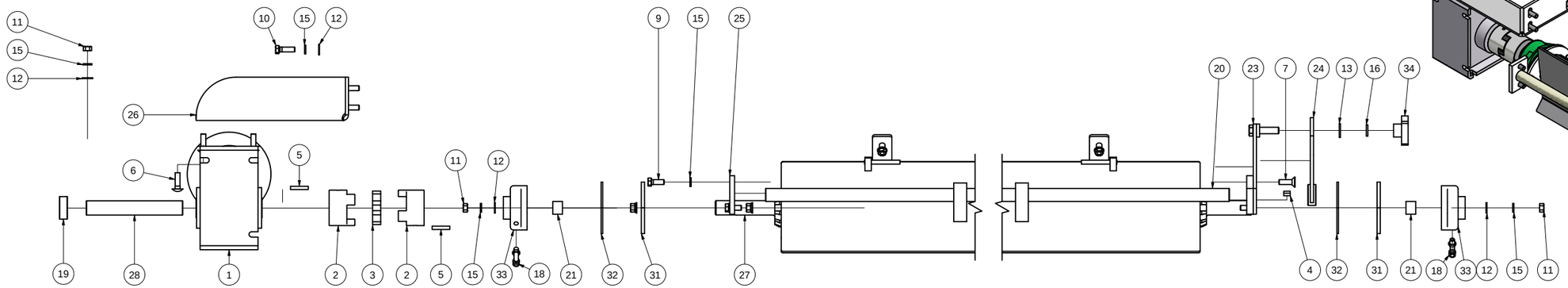

FRONT VIEW-EXPLODED

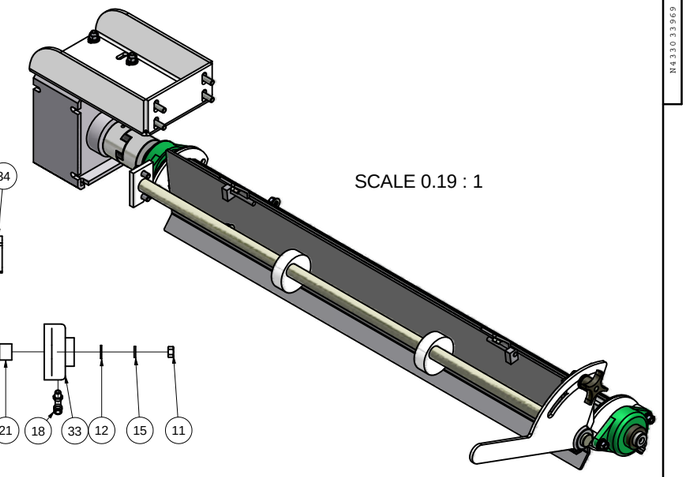

SCALE 0.19 : 1

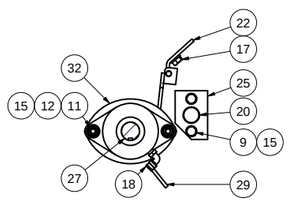

SECTION A-A
SCALE 0.22 : 1

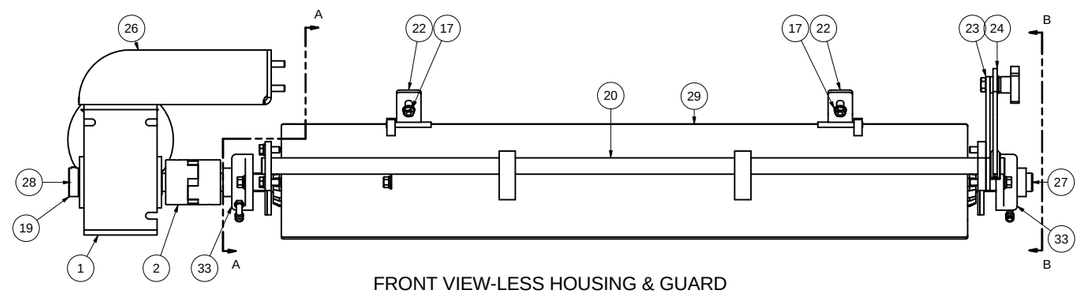

FRONT VIEW-LESS HOUSING & GUARD

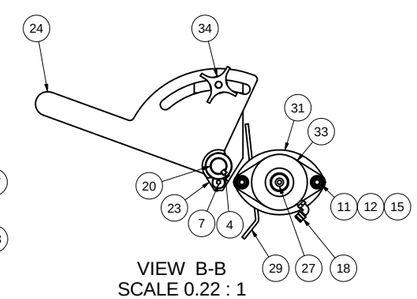

VIEW B-B
SCALE 0.22 : 1

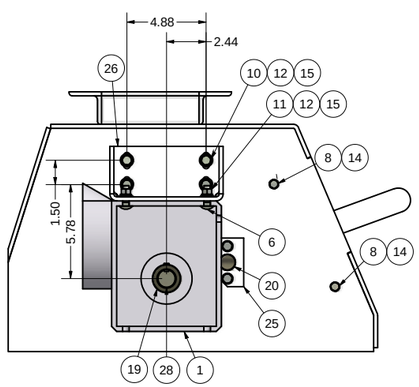

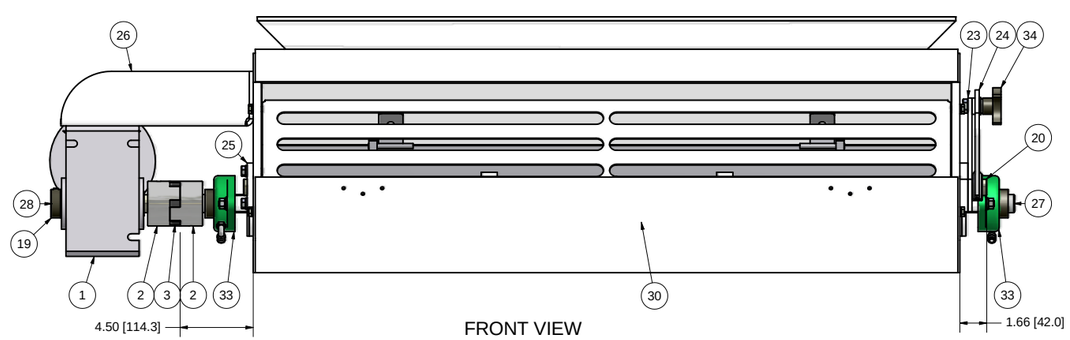

FRONT VIEW

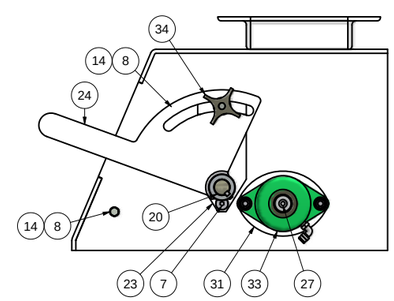

ITEM	PART NUMBER	QTY	DESCRIPTION
34	K910-01261	1	KNOB, CAST 1/2-13 OPEN
33	K902-04401	2	BRNG, F2B-SXV-102 1.125" W/COLLAR
32	K201-05365	2	SPACER, FEED ROLL, TEFLON
31	K201-05364	2	SPACER, BRNG OUTER, FEED ROLL 10-12"
30	K200-05609	1	GUARD, NIP, ROLL FEED 10 X 42"
29	K200-01956	1	GATE WLDMT, FEED ROLL 10 X 42"
28	K200-01254	1	SHAFT, CPLG, SCR ROLL FD 1.13" 10-12"
27	K200-01230	1	ROLL, FEED SCR 10 X 42"
26	K200-01024	1	MNT, RDCR, SCR ROLL FDR 10-12"
25	K200-00894	1	PLT, CVR FEED GATE ECC 10-12"
24	K200-00831	1	HANDLE WLDMT, ECC FEED GATE 10-12"
23	K200-00830	1	BRKT WLDMT, LEVER FEED GATE 10-12"
22	K200-00820	2	HINGE, FEEDER GATE 10-12"
21	K200-00787	4	BUSHING, FEED ROLL CDS 10"
20	K100-00626	1	SHAFT WLDMT, ECC FEED GATE 10X42"
19	80012006	1	COLLAR, SET 1.125"
18	70012050	2	CPLG, ELBOW 90 1/8-27M NPT X 1/4" TBG
17	66784400	2	NUT, HEX SERR LOCK 3/8-16
16	66445200	1	WASHER, LOCK HELICAL 1/2"
15	66444400	16	WASHER, LOCK HELICAL 3/8"
14	66443800	4	WASHER, LOCK HELICAL 5/16"
13	66405200	1	WASHER, FLAT 1/2" TYPE A
12	66404400	14	WASHER, FLAT 3/8" NARROW TYPE A
11	66084400	10	NUT, HEX 3/8-16
10	62584426	4	HHCS, 3/8-16 X 1.25"
9	62584422	2	HHCS, 3/8-16 X 1.00"
8	62583826	4	HHCS, 5/16-18 X 1.25"
7	61304426	2	SCW, CAP FLT SCKT HD 3/8-16X1.25"
6	60284426	4	BOLT, CARR 3/8-16 X 1.25"
5	49000622	2	KEY, SQUARE 1/4 X 1.38"
4	49000608	1	KEY, 1/4" SQ X 1/2"
3	40005519	1	INSERT, CPLG JS5N NEOPRENE
2	40005518	2	CPLG, HALF 1.125" CHJP5
1	40002610	1	GEAR RDCR, 56C/1750 15:1 1.125"

NOTES:
1. DO NOT SCALE FROM DRAWING.
2. LINE ITEM ON SALES ORDER, ONE PIECE PER K000-01235 & -01255: ROLLER MILL ASSY, SINGLE & 2HI RH RF 1.5:1 10 X 42".
3. RIGHT HAND ASSEMBLY SHOWN, ASSEMBLE SYMMETRICALLY OPPOSITE OFR LEFT HAND DRIVE ARRANGEMENT.
4. 3/4 HP C-FACE MOTOR & CONTROLLER ARE LINE ITEMS ON SALES ORDER.
5. ALTERNATIVE DIMENSIONS [X.X] IN MILLIMETERS.

This drawing is the property of the A.T. Ferrell Company, Inc and must be returned immediately upon request. No part of this drawing may be reproduced, stored in a retrieval system or transmitted in any form or by any means, without prior written consent of the A.T. Ferrell Company, Inc.

CAD

TOLERANCES
DECIMAL:
FRACTIONAL:
ANGULAR:

Ferrell-Ross
MATERIALS PROCESSING & RECOVERY
SINCE 1869
DIVISION OF A. T. FERRELL COMPANY — BLUFFTON, INDIANA - USA

FINISH:	SCALE:	DRAWN BY:	APPROVED BY:
NONE	0.22:1	dmjohnson	DMJ

TITLE: ROLL FEED INSTALLATION, SCR 10 X 42"

DATE:	SIZE:	PART NUMBER:	SHEET:
11/30/2005	D	K100-00636	1 of 1